Chapter 2: Operating-System Structures

Chapter 2: Operating-System Structures

- Operating System Services
- User Operating System Interface
- System Calls
- Types of System Calls
- System Programs
- Operating System Design and Implementation
- Operating System Structure
- Virtual Machines
- Operating System Generation
- System Boot

Operating System Services

- One set of operating-system services provides functions that are helpful to the user:
  - User interface - Almost all operating systems have a user interface (UI)
    - Varies between Command-Line Interface (CLI), Graphics User Interface (GUI), Batch
  - Program execution - The system must be able to load a program into memory and to run that program, end execution, either normally or abnormally (indicating error)
  - I/O operations - A running program may require I/O, which may involve a file or an I/O device.
  - File-system manipulation - The file system is of particular interest. Obviously, programs need to read and write files and directories, create and delete them, search them, list file Information, permission management.

Operating System Services (Cont.)

- One set of operating-system services provides functions that are helpful to the user (Cont):
  - Communications – Processes may exchange information, on the same computer or between computers over a network
    - Communications may be via shared memory or through message passing (packets moved by the OS)
  - Error detection – OS needs to be constantly aware of possible errors
    - May occur in the CPU and memory hardware, in I/O devices, in user program
    - For each type of error, OS should take the appropriate action to ensure correct and consistent computing
    - Debugging facilities can greatly enhance the user's and programmer's abilities to efficiently use the system

Operating System Services (Cont.)

- Another set of OS functions exists for ensuring the efficient operation of the system itself via resource sharing
  - **Resource allocation -** When multiple users or multiple jobs running concurrently, resources must be allocated to each of them
    - Many types of resources - Some (such as CPU cycles,mainmemory, and file storage) may have special allocation code, others (such as I/O devices) may have general request and release code.
  - **Accounting -** To keep track of which users use how much and what kinds of computer resources
  - **Protection and security -** The owners of information stored in a multiuser or networked computer system may want to control use of that information, concurrent processes should not interfere with each other
    - **Protection** involves ensuring that all access to system resources is controlled
    - **Security** of the system from outsiders requires user authentication, extends to defending external I/O devices from invalid access attempts
    - If a system is to be protected and secure, precautions must be instituted throughout it. A chain is only as strong as its weakest link.

User Operating System Interface - CLI

CLI allows direct command entry

- Sometimes implemented in kernel, sometimes by systems program
- Sometimes multiple flavors implemented – **shells**
- Primarily fetches a command from user and executes it
  - Sometimes commands built-in, sometimes just names of programs
    - If the latter, adding new features doesn't require shell modification

User Operating System Interface - GUI

- User-friendly **desktop** metaphor interface
  - Usually mouse, keyboard, and monitor
  - **Icons** represent files, programs, actions, etc
  - Various mouse buttons over objects in the interface cause various actions (provide information, options, execute function, open directory (known as a **folder**)
  - Invented at Xerox PARC
- Many systems now include both CLI and GUI interfaces
  - Microsoft Windows is GUI with CLI “command” shell
  - Apple Mac OS X as “Aqua” GUI interface with UNIX kernel underneath and shells available
  - Solaris is CLI with optional GUI interfaces (Java Desktop, KDE)

System Calls

- Programming interface to the services provided by the OS
- Typically written in a high-level language (C or C++)
- Mostly accessed by programs via a high-level **Application Program Interface (API)** rather than direct system call use
- Three most common APIs are Win32 API for Windows, POSIX API for POSIX-based systems (including virtually all versions of UNIX, Linux, and Mac OS X), and Java API for the Java virtual machine (JVM)
- Why use APIs rather than system calls?

(Note that the system-call names used throughout this text are generic)

Example of System Calls

- System call sequence to copy the contents of one file to another file

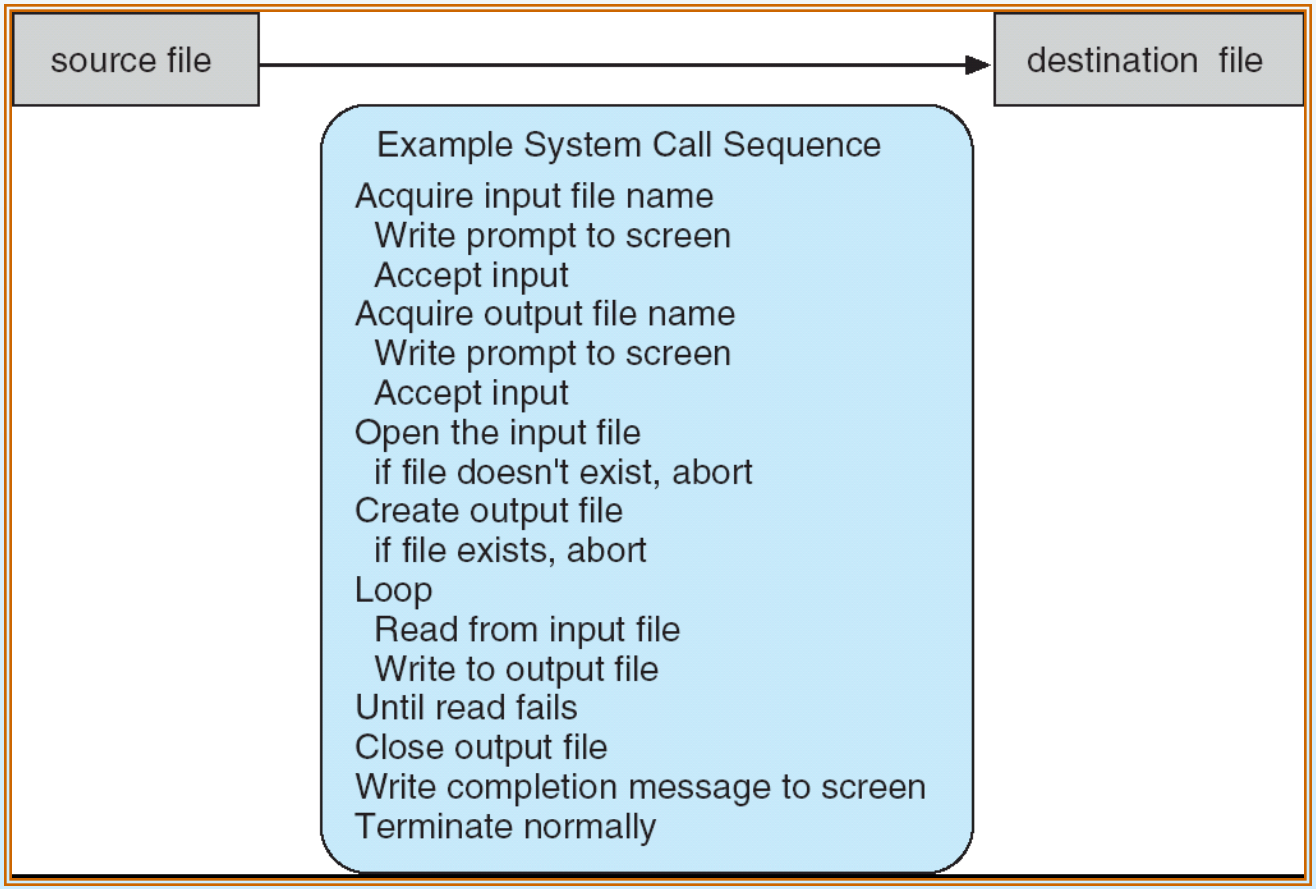

Example of Standard API

- Consider the ReadFile() function in the
- Win32 API—a function for reading from a file

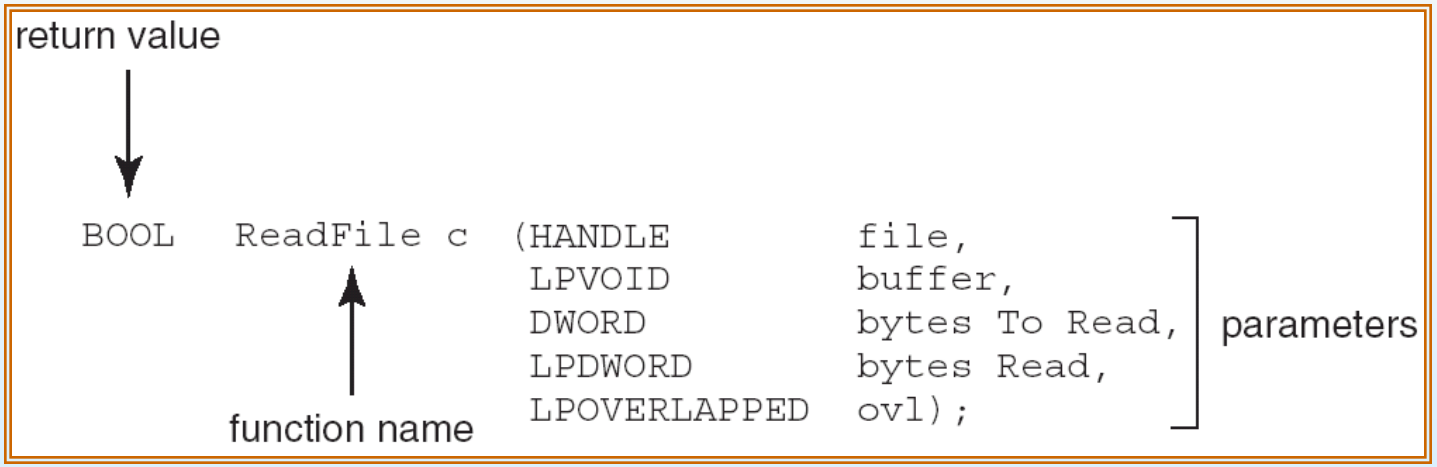

- A description of the parameters passed to ReadFile()
  - HANDLE file—the file to be read
  - LPVOID buffer—a buffer where the data will be read into and written from
  - DWORD bytesToRead—the number of bytes to be read into the buffer
  - LPDWORD bytesRead—the number of bytes read during the last read
  - LPOVERLAPPED ovl—indicates if overlapped I/O is being used

System Call Implementation

- Typically, a number associated with each system call
  - System-call interface maintains a table indexed according to these numbers
- The system call interface invokes intended system call in OS kernel and returns status of the system call and any return values
- The caller need know nothing about how the system call is implemented
  - Just needs to obey API and understand what OS will do as a result call
  - Most details of OS interface hidden from programmer by API
    - Managed by run-time support library (set of functions built into libraries included with compiler)

API – System Call – OS Relationship

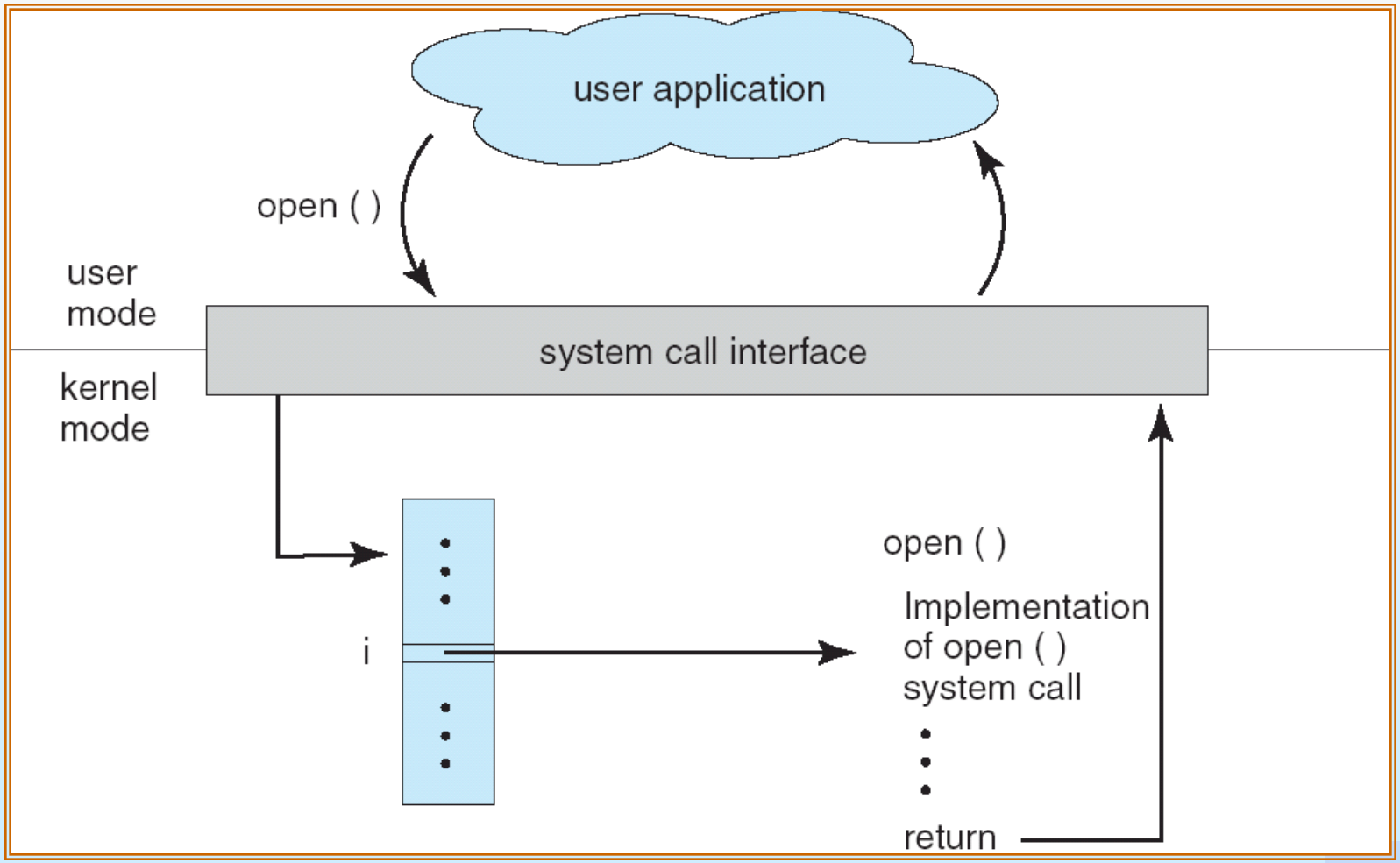

Standard C Library Example

- C program invoking printf() library call, which calls write() system call

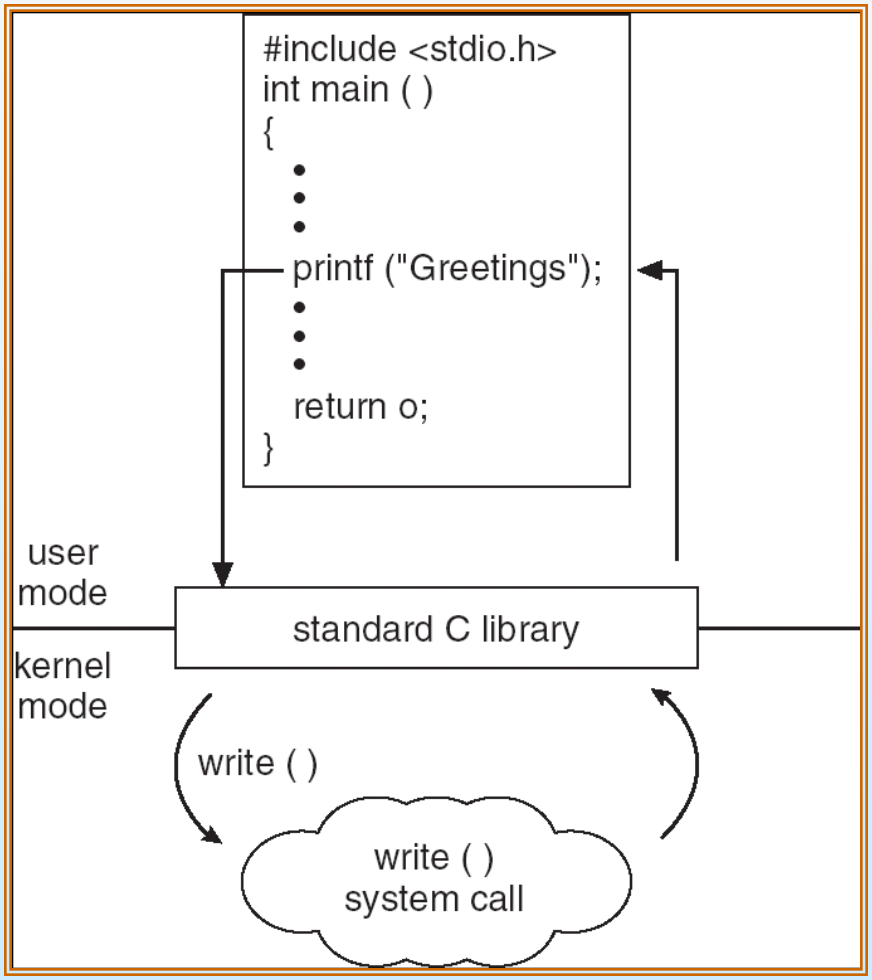

System Call Parameter Passing

- Often, more information is required than simply identity of desired system call
  - Exact type and amount of information vary according to OS and call
- Three general methods used to pass parameters to the OS
  - Simplest: pass the parameters in *registers*
    - In some cases, may be more parameters than registers
  - Parameters stored in a *block,* or table, in memory, and address of block passed as a parameter in a register
    - This approach taken by Linux and Solaris
  - Parameters placed, or *pushed,* onto the *stack* by the program and *popped* off the stack by the operating system
  - Block and stack methods do not limit the number or length of parameters being passed

Parameter Passing via Table

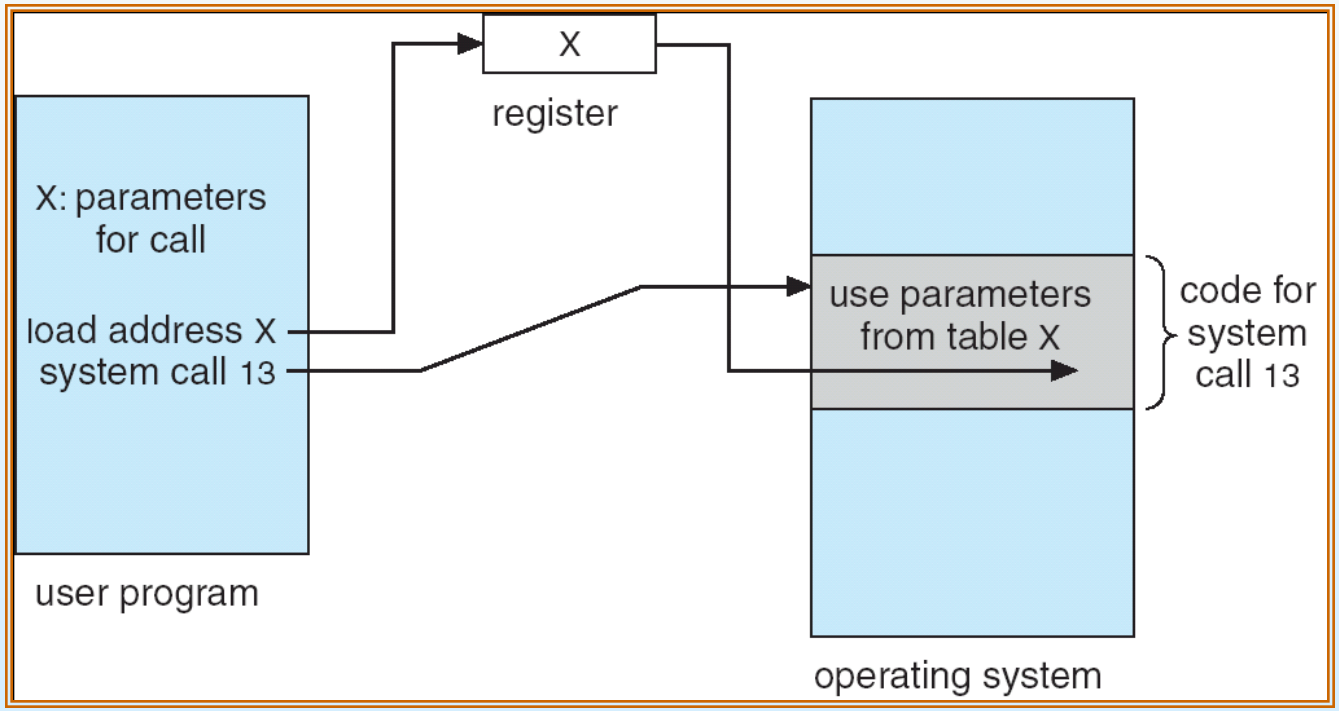

Types of System Calls

- Process control
- File management
- Device management
- Information maintenance
- Communications